BOLYMIN

BG160160C

Feature

1. SMT PCB with metal frame
2. Built-in controller LC7981
3. +5V single power supply
4. 1/160 duty cycle
5. Option: negative voltage
6. Option: LED, EL B/L

Mechanical Data

Item	Standard Value	Unit
Module Dimension	89.2 x 85.0	mm
Viewing Area	62.0 x 62.0	mm
Dot Size	0.34 x 0.34	mm
Dot Pitch	0.38 x 0.38	mm

Pin Assignment

Pin	Symbol	Function
1	FGND	Frame ground
2	Vss	Power supply (GND)
3	Vdd	Power supply (+5V)
4	Vo	Contrast adjustment
5	R/W	Data read/write
6	E	Enable singal
7	/CS	Chip select
8	RS	Data instruction select
9	Vee	Negative Voltage output(-15V)
10	/RST	Reaet signal
11~18	DB0-7	Data bus line
19	A	Power supply for B/L (+)
20	K	Power supply for B/L (GND)

Electronic Characteristics

Item	Symbol	Condition	Typical Value	Unit
Input Voltage	Vdd	Vdd = +5V	5.0	V
Supply Current	Idd	Vdd = +5V	35	mA
LCD Driving Voltage	Vdd-Vo	25 ^{o}C	17.0	V
LED Forward Voltage	Vf	25 ^{o}C	4.2	V
LED Forward Current	If	25 ^{o}C	500	mA
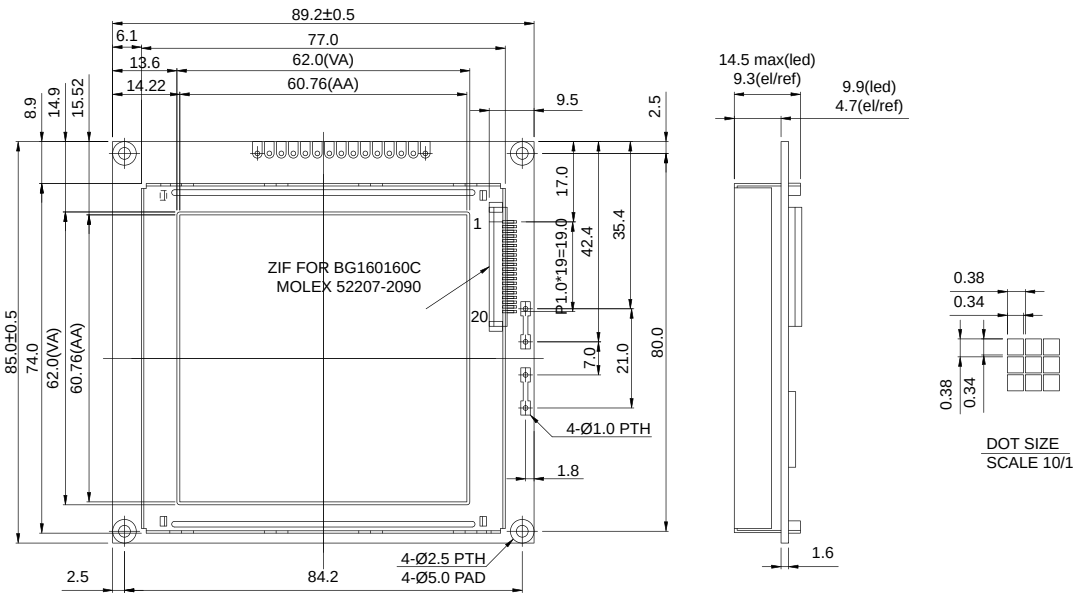
Dimension