## Revisions

Note: Revisions B; B-1; B-2..... On behalf of official Drawing.
Revisions 1; 2; 3; 4..... On behalf of experiment's Drawing.

| ISS | Symbol | Description | Date |
|---|---|---|---|
| B | B | CHE for New Drawing Frame & New PN System | 2006/07/11 |

Outline Drawing

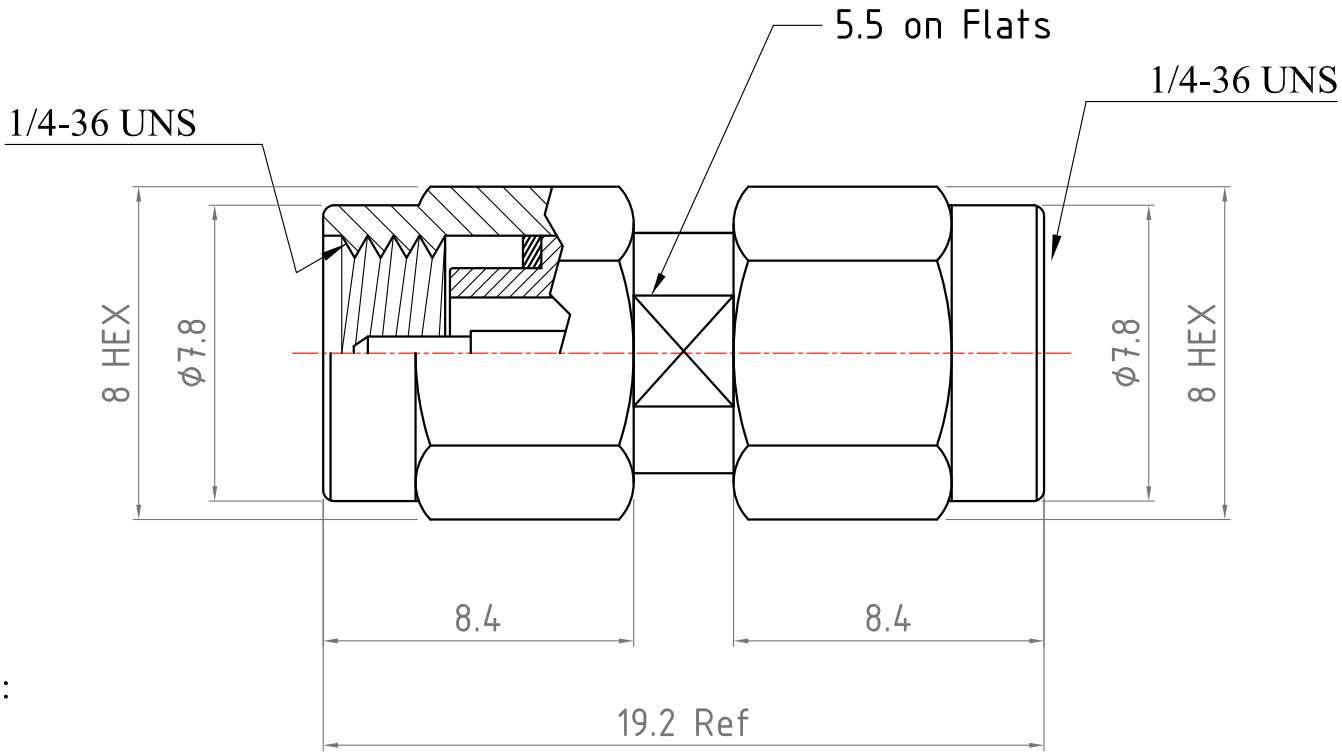


Electrical Performance :

1. Impedance : 50 ohm
2. Frequency Range : 0 to 18 GHz
3. Vswr : 1.2 max.
4. Voltage Rating : 500 VRMS max.
5. Dielectric Withstanding Voltage : 1000 Vrms min.

RoHS COMPLIANCE

| ITEM | Description | Material | Finish | Part Number | QTY |
|---|---|---|---|---|---|
| 6 | | | | | |
| 5 | | | | | |
| 4 | Pin | Brass | 30u"Gold | | |
| 3 | Insulator | PTFE | None | | |
| 2 | Body | Brass | Gold | | |
| 1 | Shell | Brass | Gold | | |

| Scale | Abbr. | Date | Rev. |
|---|---|---|---|
| NTS | ST | 2011/04/28 | B |

Tolerances :
.X ±0.2
.XX ±0.1
.XXX±0.05

All Dimensions in mm (Unless Otherwise Specified)

| Drawn | Checked | Approved |
|---|---|---|
| Mark 2011/04/28 | Ryan 2011/04/28 | G. Sun 2011/04/28 |

DWG. NO. W50110019

Customer P/N:

TITLE SMA Plug to SMA Plug Adapter

Proprietary Note
This document contains information proprietary to MAP, which is either copyrighted, or patent applied for, and / or protected by trade secret laws.
This document or parts thereof, may not be used disclosed or reproduced in any form by any method, or for any purpose, without the written permission of MAP, Japan.

MAP electronics co., ltd.
Material All Procurement